RENNCO

PACKAGING SOLUTIONS FOR THE LAUNDRY INDUSTRY

YOUR PRODUCT. YOUR BUDGET. YOUR NEEDS.

FL

FLEXIBLES

PACKAGING SOLUTIONS FOR THE LAUNDRY INDUSTRY

Packaging Solutions for over 40 Years

Rennco manufactures a full line of vertical packaging machinery and automated systems that create flexible packages and bags to suit your products and needs. Since 1969, companies around the world have depended on Rennco's bagging solutions to package a wide variety of products. Rennco's fast, easy-to-use form, fill, and seal systems produce packages on the Vertic-L- PP Systems up to 18"x 24", without the high cost of using pre-made bags.

SAMPLE APPLICATIONS:

- Bar Towels
- Shop Rags
- Garments
- Wash Cloths
- Hand Towels
- Knit Sheets
- Hospital Gowns
- Towel Sets
- Sheet Sets

VERTIC·L-PP SYSTEM

Packaging solutions designed to meet your needs and product requirements

SHRINK WRAPPED LINENS

WASH CLOTHES BAGGED
IN POLYETHYLENE

BULK TOWELS IN A BAG

The Rennco Advantage

Rennco's versatile machines deliver year-after-year reliability and value that simply can not be matched by other vertical baggers or options using pre-made bags.

HERE IS THE RENNCO ADVANTAGE

- **Experience.** More than 5,000 packaging equipment solutions delivered to more than 1,400 customers in 47 countries.
- **Expertise.** Rennco engineering and technical support team excels at solving packaging challenges in laundry facilities.
- **Support.** One of the leading reasons for Rennco's many repeat customers. Rennco stands behind all of their solutions with courteous, responsive customer support and comprehensive aftermarket services and parts. Rennco is also powered by ProMach, one of the largest designers and manufacturers of packaging equipment.
- **Innovation.** Rennco's innovation in the laundry industry has provided many specialized bagging solutions. Whether it be counting and sorting by hand or a more automated weigh bagging solution. Rennco can custom design a system for your facilities needs.
- **Value.** Small footprint, high efficiency, and savings on material cost over pre-made bags provide years of value and low total cost of ownership.

Versatile, reliable, cost-effective automation

VERTIC·L-PP SYSTEM

ADVANTAGES

- Vertical film roll placement of centerfolded material for ease of roll change
- Produces trim-less packages thus eliminating the need for a trim/scrap rewind system
- User-friendly HMI screen for setting selections
- Significant cost savings over pre-made bags
- Bag tapper assists with distribution of products in the package

OPTION

- Weigh scale add-on available for faster alternative to counting

OPERATOR LOADING TOWELS TO CENTERFOLD FILM

TYPICAL PRODUCT SPECIFICATIONS

Standard Horizontal Seal	24"
Standard Vertical Seal	18"
Standard Jaw Opening	9½"
Vertic-L-PP Electrical Requirements	120 V, 60 HZ, 1 ph, 15 amps
Vertic-L-PP Dual Electrical Requirements	120 V, 60 HZ, 1 ph, 20 amps
Air Requirements	.6 CFM 80 PSI

VERTIC·L-PP SYSTEM

Top view - Vertic·L-PP System

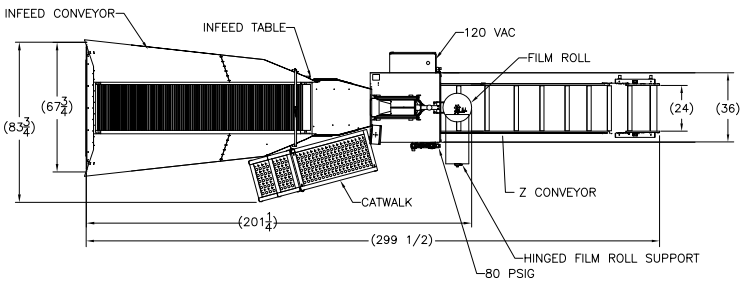

Side view - Vertic·L-PP System

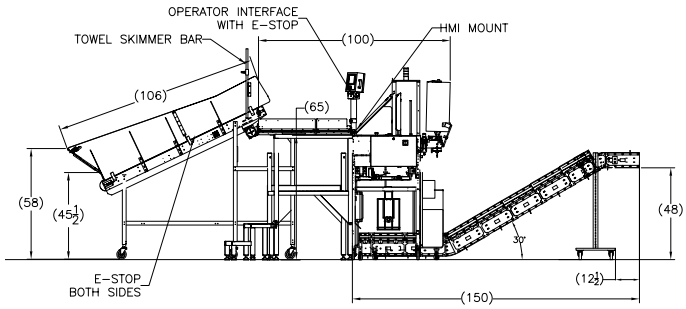

VERTIC·L-PP DUAL SYSTEM

INTERFACE PANEL SHOWS CORRECT PRODUCT COUNT

ADVANTAGES

- Dual Output
- Increased efficiency with (1) hopper area, (2) operator loading areas & (2) seal systems

OPTION

- Weigh scale add-on available for faster alternative to counting

TWO OPERATORS INSPECTING TOWELS BEFORE LOADING TO FILM

DUAL VERTIC·L-PP LOAD AREA

Top view - Vertic·L-PP System

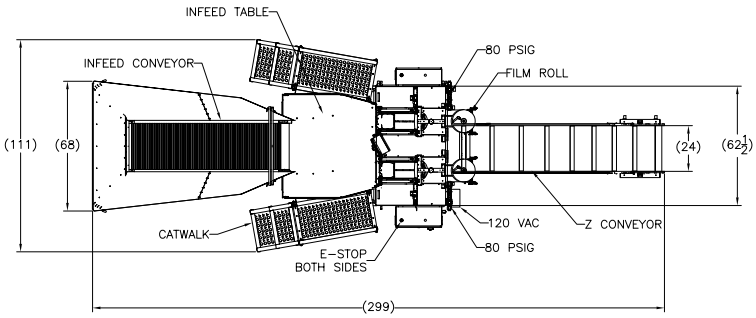

Side view - Vertic·L-PP System

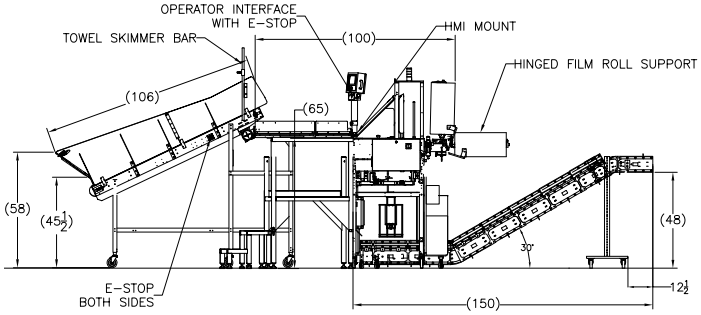

TECHNICAL SUPPORT AND SERVICE

Ensuring All Production Expectations Are Met

PACKAGING SOLUTIONS FOR OVER 40 YEARS

- **Installation and Start Up of New Equipment.** Experienced Rennco technicians provide assistance in setting up and testing in your plant to ensure all production expectations are met.
- **PMMI Certified Training.** Rennco will train your personnel in your plant on your equipment
- **Follow-Up Training.** Rennco technicians are available any time after the initial installation for follow-up training for new employees or to provide new information and techniques.
- **Machine Repair and Service.** Rennco technicians provide timely repair assistance and general machine service. They offer equipment evaluations, assistance in achieving maximum production rates, and recommendations for upgrades and maintenance schedules.
- **Refurbishing Packagers or Entire Systems.** Cost effective and warranted factory refurbishing is available for most Rennco equipment.

AFTER-MARKET CUSTOMER SERVICES

- **Competent Phone Service.** Trouble shooting support for everything from mechanical adjustments to electrical controls, PLC programming, and recommended maintenance. Contact Rennco at 800-701-1343.
- **Parts Sales.** Rennco takes pride in our responsive and supportive parts department. Most orders are shipped the same day and arrive at your door the next day, if required.
- **After Hours Support.** Call 517-449-8901 after 5 pm ET to speak with a service technician.

FOR MORE INFORMATION:
800-409-5225 • *Rennco.com*

5,000+

PACKAGING EQUIPMENT
SOLUTIONS DELIVERED

VERSATILE, RELIABLE, COST-EFFECTIVE AUTOMATION.

YOUR PRODUCT. YOUR BUDGET. YOUR NEEDS.

PROMACH®

RENNCO®

Manufacturers of consumer and food service disposables, hardware, consumer goods, medical goods, and industrial laundry services rely on Rennco for high-performance automatic and semi-automatic vertical bagging systems. As part of the ProMach Flexibles business line, Rennco helps our packaging customers protect and grow the reputation and trust of their consumers. ProMach is performance, and the proof is in every package.

300 Elm St

Homer, MI 49245

TOLL FREE: 800-409-5225

INTERNATIONAL: 517-568-4121

F: 517-568-4798

E: Rennco@ProMachBuilt.com

Rennco.com

©2018 ProMach Inc. ProMach reserves the right to change or discontinue specifications and designs shown in this brochure without notice or recourse

PM-REN-PB600_LaundryIndustryProductBroch